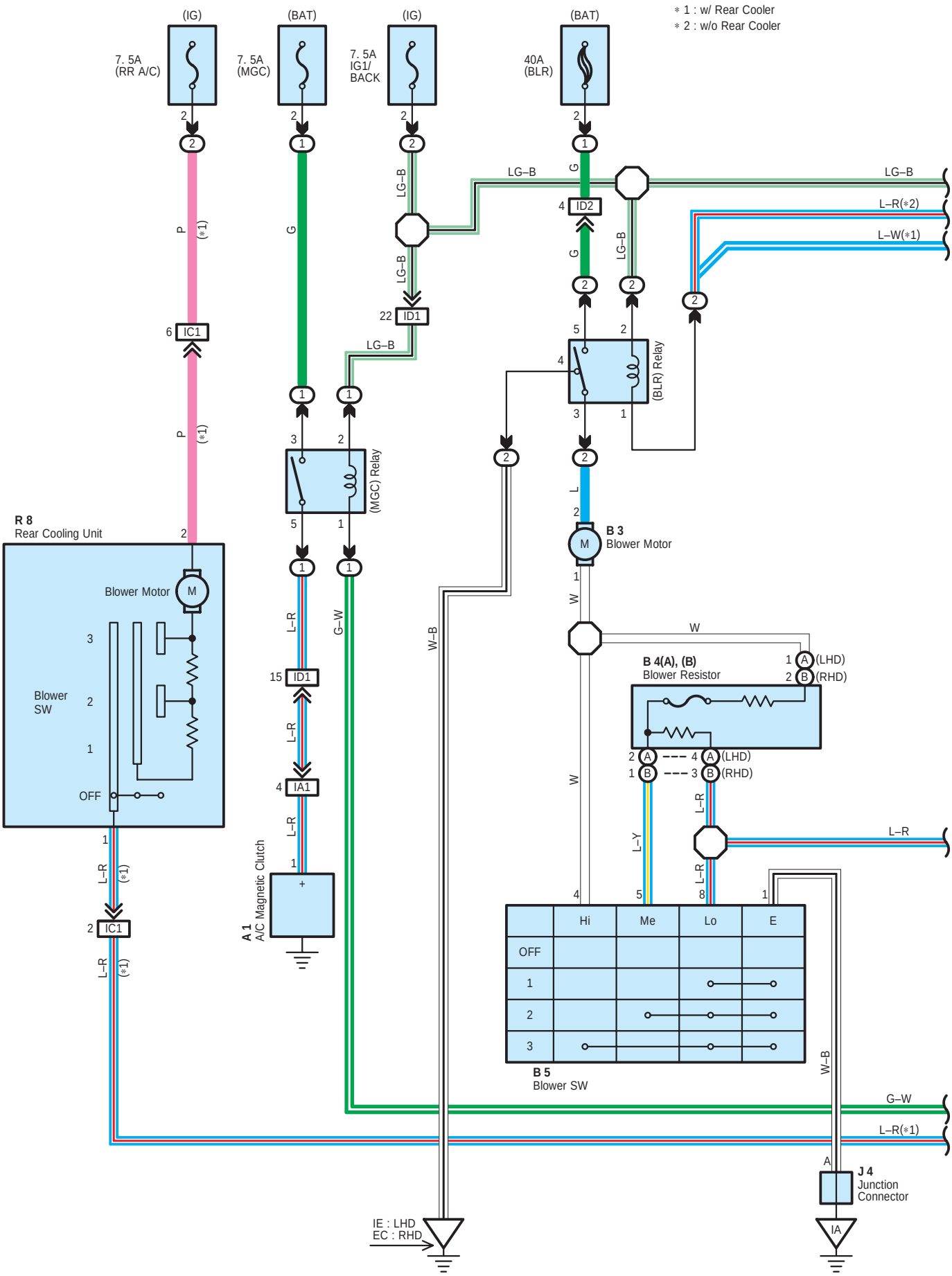
∗ 1 : w/ Rear Cooler
∗ 2 : w/o Rear Cooler
(IG)
7. 5A
(RR A/C)
(BAT)
7. 5A
(MGC)
(IG)
7. 5A
IG1/
BACK
(BAT)
40A
(BLR)
LG–B
L–R(∗2)
L–W(∗1)
ID2
ID1
IC1
(BLR) Relay
(MGC) Relay
R 8
Rear Cooling Unit
Blower Motor
Blower
SW
OFF
B 3
Blower Motor
B 4(A), (B)
Blower Resistor
(LHD)
(RHD)
L–R
G–W
W–B
L–Y
IA1
A 1
A/C Magnetic Clutch
Hi
Me
Lo
E
B 5
Blower SW
J 4
Junction
Connector
IE : LHD
EC : RHD
IA

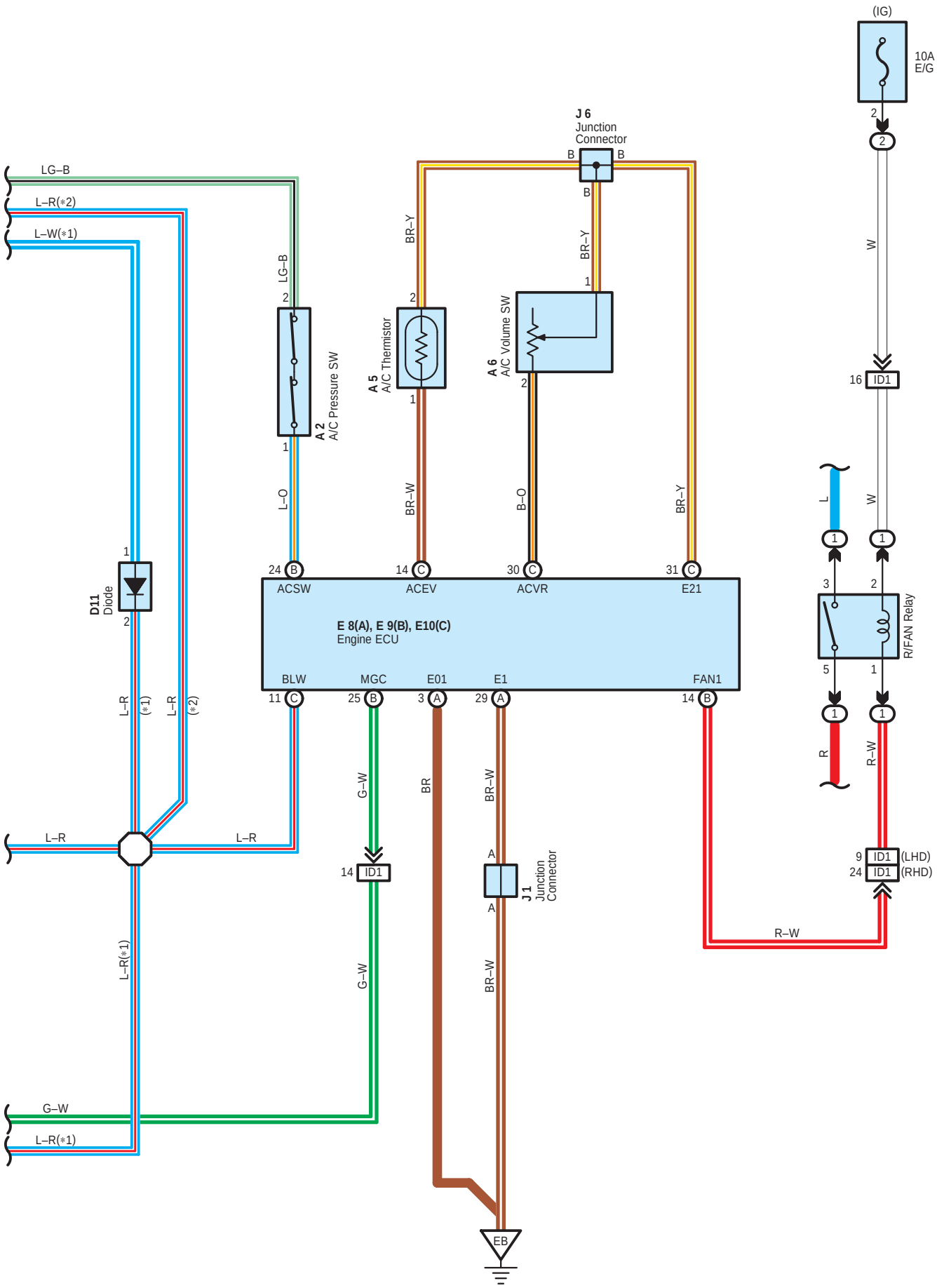
(IG)
10A
E/G
J 6
Junction
Connector
LG–B
L–R(*2)
L–W(*1)
BR–Y
BR–Y
W
A 2
A/C Pressure SW
A 5
A/C Thermistor
A 6
A/C Volume SW
16 ID1
L–O
BR–W
B–O
BR–Y
L
W
D11
Diode
24 B
14 C
30 C
31 C
ACSW
ACEV
ACVR
E21
E 8(A), E 9(B), E10(C)
Engine ECU
R/FAN Relay
BLW
MGC
E01
E1
FAN1
11 C
25 B
3 A
29 A
14 B
L–R
(*1)
L–R
(*2)
R
R–W
G–W
BR
BR–W
L–R
L–R
14 ID1
J 1
Junction
Connector
9 ID1 (LHD)
24 ID1 (RHD)
R–W
L–R(*1)
G–W
BR–W
G–W
L–R(*1)
EB

System Outline

Current is applied at all times through the (BLR) fuse to TERMINAL 5 of the (BLR) relay.
When the ignition SW is turned on, the current flows through the IG1/BACK fuse to TERMINAL 2 of the (BLR) relay to TERMINAL 1 to TERMINAL 8 of the blower SW.

Blower Motor Operation

∗ Low speed operation
When the blower SW is moved to low position, the current flows to TERMINAL 8 of the blower SW to TERMINAL 1 to GROUND, causing the (BLR) relay to turn on. This causes the current flows from the (BLR) fuse to TERMINAL 5 of the (BLR) relay to TERMINAL 3 to TERMINAL 2 of the blower motor to TERMINAL 1 to TERMINAL (A) 1 (LHD), (B) 2 (RHD) of the blower resistor to TERMINAL (A) 4 (LHD), (B) 3 (RHD) to TERMINAL 8 of the blower SW to TERMINAL 1 to GROUND, rotating the blower motor at low speed.

∗ Medium speed operation
When the blower SW is moved to medium position, the current flows to TERMINAL 8 of the blower SW to TERMINAL 1 to GROUND, causing the (BLR) relay to turn on. This causes the current flows from the (BLR) fuse to TERMINAL 5 of the (BLR) relay to TERMINAL 3 to TERMINAL 2 of the blower motor to TERMINAL 1 to TERMINAL (A) 1 (LHD), (B) 2 (RHD) of the blower resistor to TERMINAL (A) 2 (LHD), (B) 1 (RHD) to TERMINAL 5 of the blower SW to TERMINAL 1 to GROUND. At this time, the blower resistance of the blower resistor is smaller than at low speed, so the blower motor rotates at medium speed.

∗ High speed operation
When the blower SW is moved to high position, the current flows to TERMINAL 8 of the blower SW to TERMINAL 1 to GROUND, causing the (BLR) relay to turn on.
This causes the current flows from the (BLR) fuse to TERMINAL 5 of the (BLR) relay to TERMINAL 3 to TERMINAL 2 of the blower motor to TERMINAL 1 to TERMINAL 4 of the blower SW to TERMINAL 1 to GROUND, rotating the blower motor at high speed.

○ : Parts Location

Code	See Page	Code		See Page	Code		See Page
A1	24 (*1)	B3		28 (LHD)	E10	C	28 (LHD)
	26 (*2)			38 (*6)			38 (*6)
	32 (*3)	B4	A	28 (LHD)	J1		29 (LHD)
	34 (*4)		B	38 (*6)			39 (*6)
A2	24 (*1)	B5		28 (LHD)	J4		29 (LHD)
	26 (*2)			38 (*6)			39 (*6)
	32 (*3)	D11		28 (LHD)	J6		29 (LHD)
	34 (*4)			38 (*6)			39 (*6)
A5	28 (LHD)	E8	A	28 (LHD)	R8		31 (LHD)
	38 (*6)			38 (*6)			41 (RHD)
A6	28 (LHD)	E9	B	28 (LHD)			
	38 (*6)			38 (*6)			

▭ : Relay Blocks

Code	See Page	Relay Blocks (Relay Block Location)
1	22	Engine Room R/B (Engine Compartment Right)
2	23 (LHD)	Fuse Block (Left Kick Panel)
	23 (RHD)	Fuse Block (Right Kick Panel)

* 1 : LHD 3SZ–VE * 2 : LHD K3–VE * 3 : RHD 3SZ–VE * 4 : RHD K3–VE * 5 : RHD w/ Heater * 6 : RHD w/o Heater

: Connector Joining Wire Harness and Wire Harness

Code	See Page	Joining Wire Harness and Wire Harness (Connector Location)
IA1	44 (LHD)	Engine Wire and Instrument Panel Wire (Right Kick Panel)
	49 (*6)	Engine Wire and Instrument Panel Wire (Left Kick Panel)
IC1	44 (LHD)	Instrument Panel Wire and Roof Wire (Cowl Side Panel RH)
	49 (*6)	
ID1	44 (LHD)	Engine Room Main Wire and Instrument Panel Wire (Right Kick Panel)
	49 (*6)	Engine Room Main Wire and Instrument Panel Wire (Cowl Side Panel RH)
ID2	44 (LHD)	Engine Room Main Wire and Instrument Panel Wire (Right Kick Panel)
	49 (*6)	Engine Room Main Wire and Instrument Panel Wire (Cowl Side Panel RH)

: Ground Points

Code	See Page	Ground Points Location
EB	42 (*1)	Rear Side of Engine Block
	43 (*2)	
	46 (*3)	
	47 (*4)	
EC	46 (*3)	Left Fender Apron
	47 (*4)	
IA	44 (LHD)	Right Kick Panel
	49 (*6)	Left Kick Panel
IE	44 (LHD)	Cowl Side Panel LH

* 1 : LHD 3SZ–VE * 2 : LHD K3–VE * 3 : RHD 3SZ–VE * 4 : RHD K3–VE * 5 : RHD w/ Heater * 6 : RHD w/o Heater